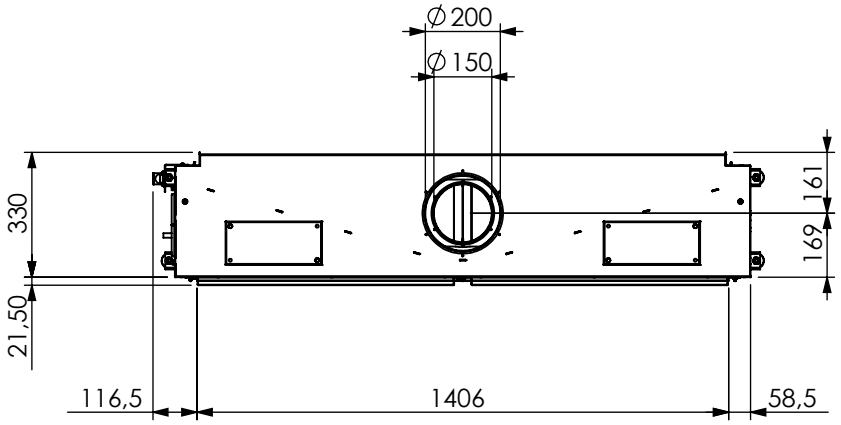

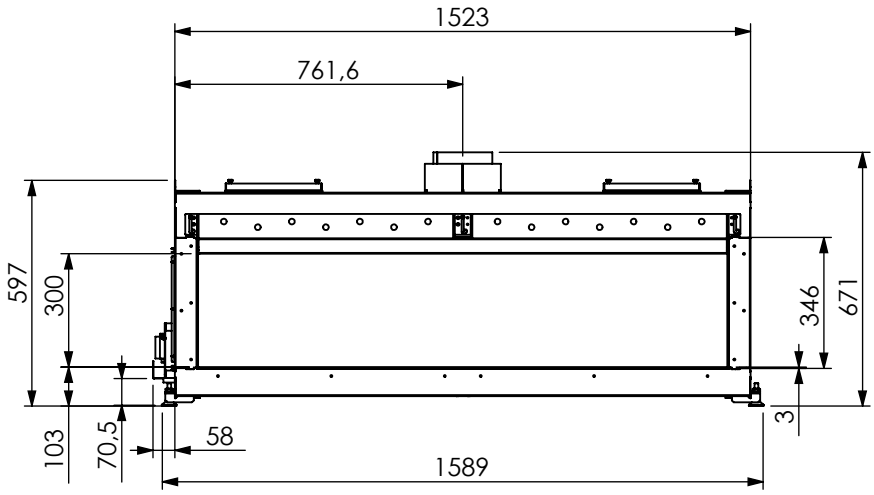

NEN - ISO 286	*Treatment:*				
Third Angle Projection ISO 128-Method A	*Material:* THICKNESS:mm				
	Life cycle state:	*Life Cycle Date:*	*Author:*	*Scale:* 1:20	*Page:* 1/1	*Dimensions:* mm
kal-fire SCHOUWEN HAARDEN ROOKKANALEN www.kal-fire.nl info@kal-fire.nl	*Specification Title:*				
	Specification Number:			*Revision:* 00	*Frame_size:* A4

All rights preserved. Copywrited / Reprints prohibited. Kal-fire BV 2006