Hybride 75 ECO-line

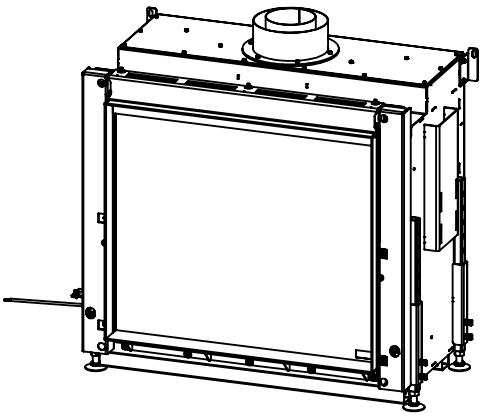

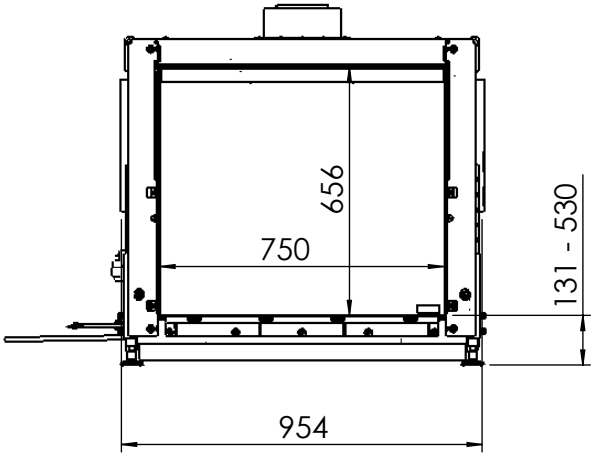

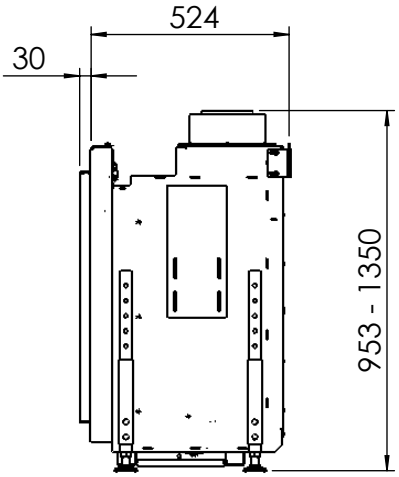

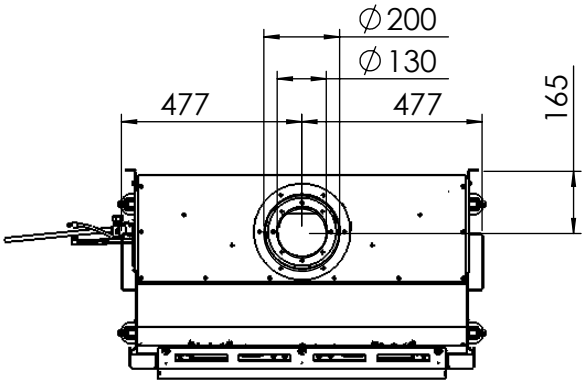

All dimensions in mm. Modifications under reserve. 16-10-2012 sheet 1 / 3

© All rights reserved. This drawing is sole property of Kal-fire. No part of this drawing may be reproduced, or published, in any form or in any way without prior written permission from Kal-fire.

Hybride 75 ECO-line

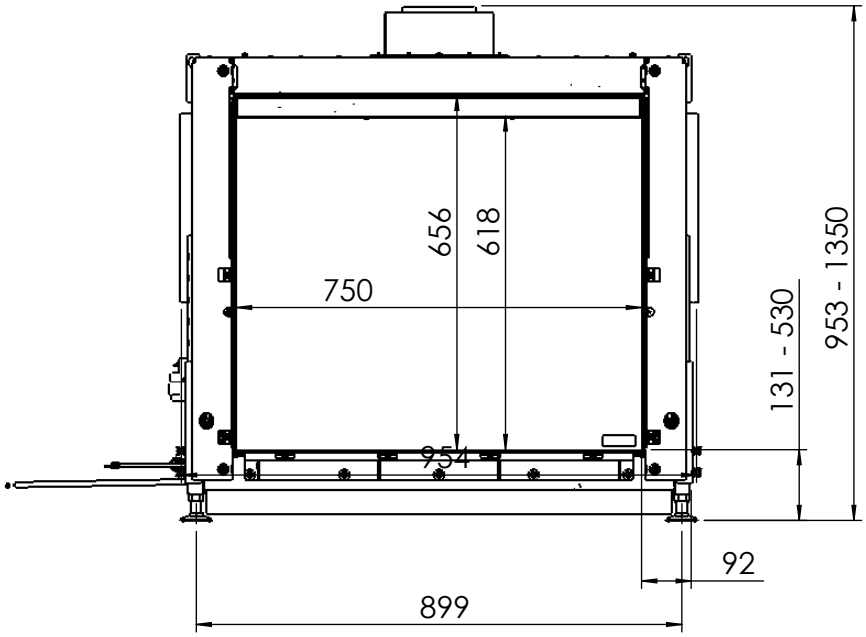

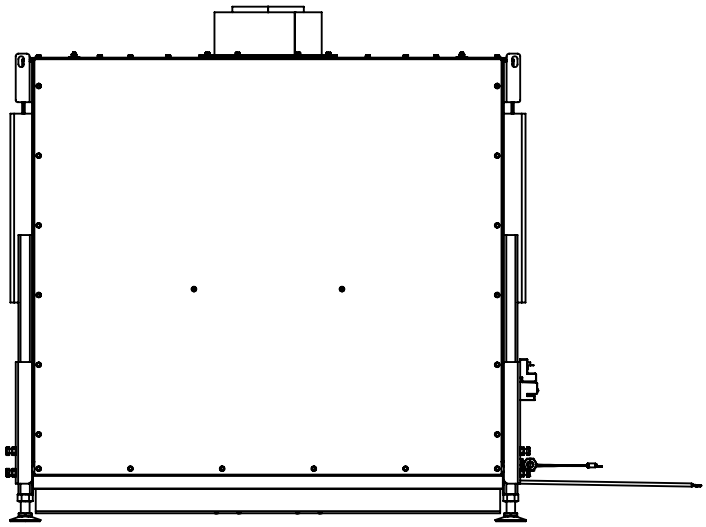

© All rights reserved. This drawing is sole property of Kal-fire. No part of this drawing may be reproduced, or published, in any form or in any way without prior written permission from Kal-fire.

Hybride 75 ECO-line

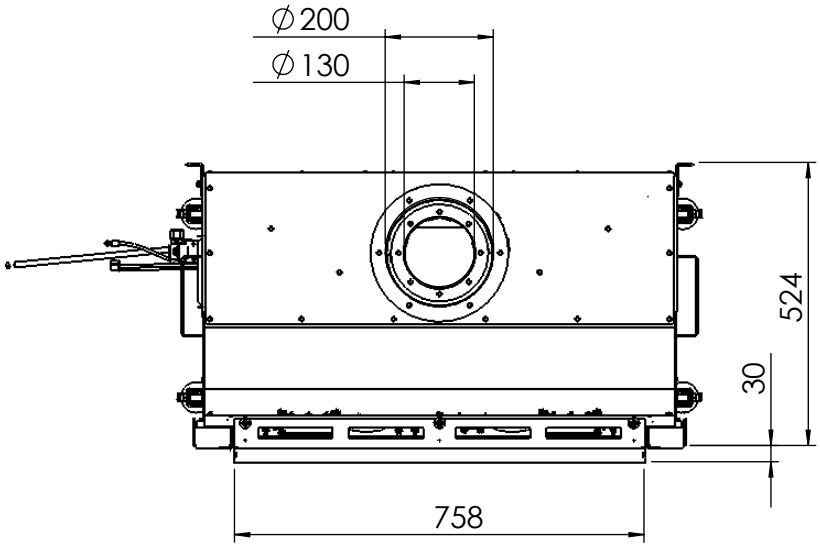

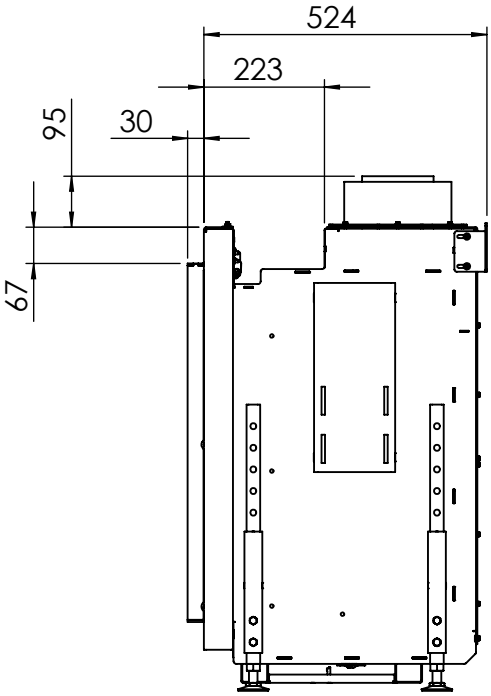

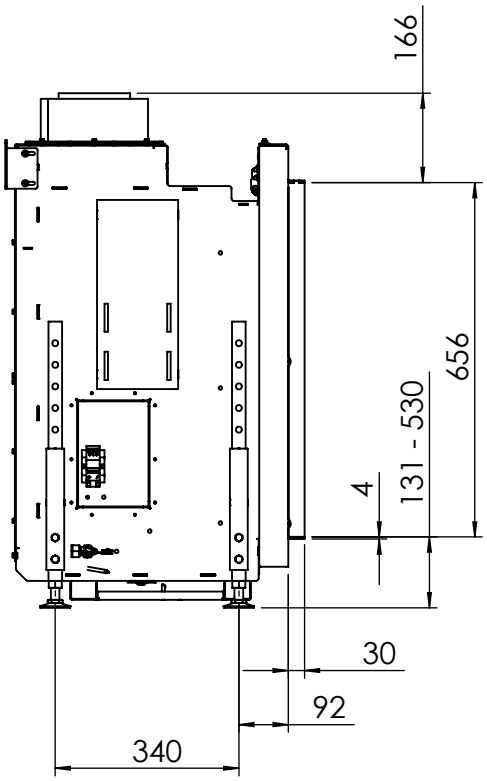

All dimensions in mm. Modifications under reserve.

16-10-2012 sheet 3 / 3

© All rights reserved. This drawing is sole property of Kal-fire. No part of this drawing may be reproduced, or published, in any form or in any way without prior written permission from Kal-fire.